FEATURES

- ◆Lens Brand： ZLKC
- ◆1/2″C-Mount 4mm F2.0
- ◆Can suppress stray light
- ◆Low distortion, high contrast
- ◆Required for high accuracy

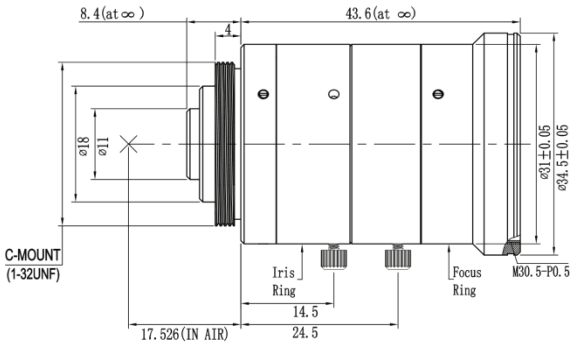

SPECIFICATION

2MP 4mm wide angle FA Lens C Mount		
Model		**HM0420MP2**
Image Size		1/2-inch
Focal length		4mm
F No.		F2.0-16
M.O.D(m)		0.1-Inf.
Operation	Iris	Manual
	Focus	Manual
Angle of View (D×H×V)	1/3"	72.4°×60.6°×47.2°
	1/2"	88.2°×76.0°×60.6°
Distortion		<1.6%
BFL		8.7mm
Mount		C-Mount
Object Dimension		156mm×117mm(WD=100mm)
		312mm×234mm(WD=200mm)
		648mm×351mm(WD=300mm)
		936mm×702mm(WD=600mm)
Dimension		Φ34.5×43.6mm
Weight		90.5g
Horizontal Resolution		100lp/mm
Filter Thread		M30.5*0.5
Working Temperature		-20ºC ～ +70ºC