H6Z0812M

6X 8mm - 48mm F1.2
for 1/2 type Cameras, Motorized Zoom
C-Mount

Model No.		H6Z0812M		Effective Lens Aperture	Front	Ø39.2mm	
Focal Length		8mm - 48mm			Rear	Ø16.6mm	
Max. Aperture Ratio		1:1.2		Back Focal Length		11.4mm	
Max. Image Format		6.4mm x 4.8mm(Ø8mm)		Flange Back Length		17.526mm	
Operation Range	Iris	F1.2 - F16C		Mount		C-Mount	
	Focus	1.2m - Inf.		Filter Size		M49 P=0.75mm	
	Zoom	8mm - 48mm		Tripod Screw		1/4 - 20UNC	
Control	Iris	Motorized		Dimensions		W66mm x H73.5mm x D97mm	
	Focus	Motorized		Weight		400g	
	Zoom	Motorized					
Object Dimension	8mm	98.4cm x 72.2cm					
at M.O.D.	48mm	16.8cm x 12.8cm					
Angle of View	D	1/2 type	55.8° - 9.9°	1/3 type	41.8° - 7.5°	1/4 type	31.4° - 5.6°
	H		44.6° - 8.0°		33.5° - 6.1°		25.2° - 4.6°
	V		33.5° - 6.1°		25.2° - 4.6°		18.9° - 3.4°
		Iris		Focus		Zoom	
Supply Voltage		DC8V		DC8V		DC8V	
Current		20mA or less		30mA or less		30mA or less	
Response Time		Approx. 2.5 sec.		Approx. 4.5 sec.		Approx. 4 sec.	
Preset Potentiometer		—		—		—	
Operating Temperature		—10°C - +50°C					

M.O.D. : Minimum Object Distance

Dimensions

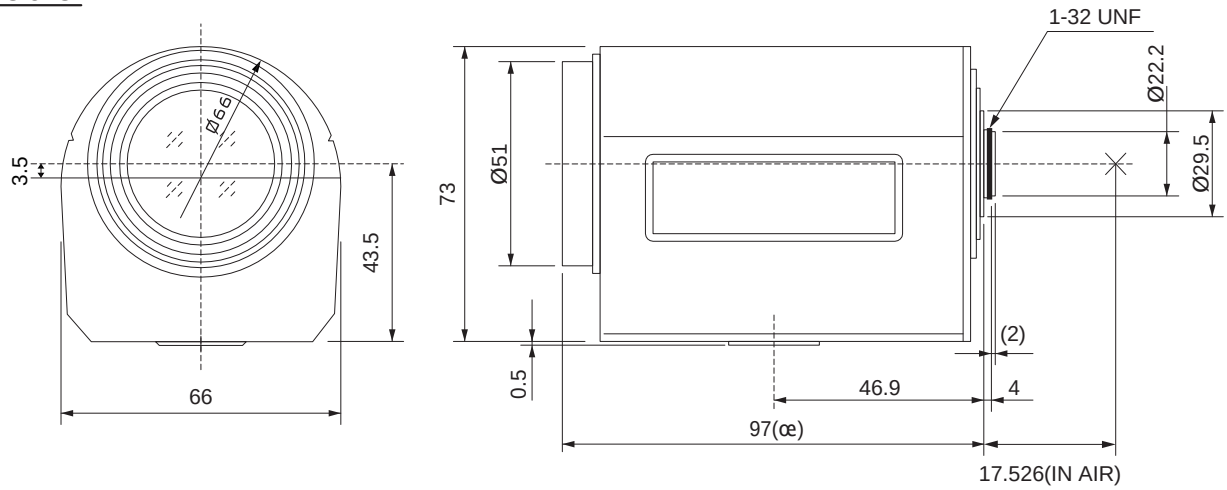

Wiring Diagram

